HIGH CURRENT PROBES

WITH INTEGRATED TEMPERATURE MEASUREMENT
FOR TESTING, CHARGING AND DISCHARGING OF:

- BATTERIES
- BATTERY-CELLS
- LI-ION ENERGY STORAGES

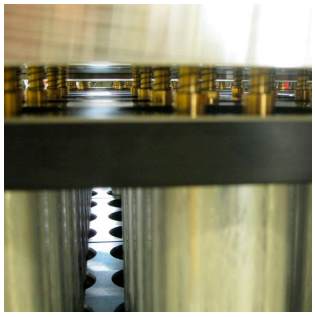

Version 2

FEINMETALL
Contact Technologies

HIGH CURRENT PROBES

For production and testing of batteries and battery cells

- for formation and testing of Li-Ion cells
- for quality control of batteries and energy storages
- for battery-charging and discharging processes

With reliable contact elements and fixtures for manufacturing of lithium ion cells and for battery production FEINMETALL has established as a strong partner in this industry segment.
Many years of cooperation with customers and partners result in the development and realization of reliable and practical products as well as in a high level of expertise in secure adaption and contacting of cells and batteries.

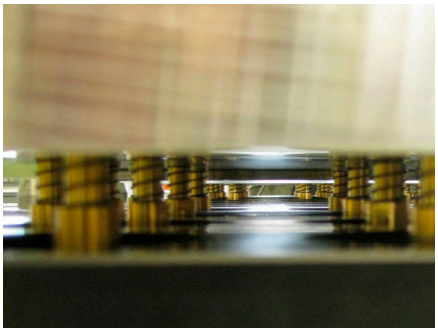

Detail picture of a contacting device for large cylindric lithium cells

Our contacting solutions are ideal for testing, charging and discharging different cell types.
Examples shown below.

Cylindric Cell

Prismatic Cell

Pouch Cell

Edition04/2019. All rights reserved. Further versions can be found at **www.feinmetall.com**

OVERVIEW HIGH CURRENT SOLUTIONS

Probes for high current applications

Status	Series	Current	Barrel- Ø [mm]	Total length [mm]	Centers [mm/mil]	Category
	1860C001	50	11,00	8,90	12,00 / 472	High Current Probe
	1860C005	50	6,30	30,00	11,00 / 433	High Current Probe
	1860C006	100	10,70	7,70	11,50 / 453	High Current Probe
	1860C009	80	10,00	36,40	12,00 / 472	High Current Probe
	F310	10	1,00	26,00	1,90 / 75	High Current Probe
	F320	12	1,35	32,00	2,54 / 100	High Current Probe
	F330	14	2,00	40,00	3,00 / 118	High Current Probe
	F340	16	2,40	50,00	3,50 / 138	High Current Probe
	F360...C	15	M2,5	4,90	3,70 / 146	High Current Probe
	F566...C	35	3,18	36,10	4,50 / 177	High Current Probe
	F713...C	25	2,65	15,00	4,00 / 157	High Current Probe
	F723...C	25	2,65	17,10	4,00 / 157	High Current Probe
	F725...C	50	3,50	17,10	5,00 / 197	High Current Probe
	F732...C	20	1,65	35,70	2,54 / 100	High Current Probe
	F733...C	25	2,65	28,30	4,00 / 157	High Current Probe
	F725...C	50	3,50	17,1	5,00 / 197	High Current Probe
	F735...C	50	3,50	43,10	5,00 / 197	High Current Probe
	F762...C	40	2,65	48,60	4,00 / 157	High Current Probe
	F772...C	20	1,65	32,30	2,54 / 100	High Current Probe
	F773...C	25	2,65	27,30	3,50 / 138	High Current Probe
	F775...C	50	3,50	38,50	5,00 / 197	High Current Probe
	F348...C	100	5,80	52,10	7,60 / 300	High Current Probe

Coaxial probes for high current applications

Status	Series	Current	Barrel- Ø [mm]	Total length **[mm]**	Centers [mm/mil]	Category
	1860C003	75	9,05	49,10	14,00 / 551	Coaxial High Current Probe
	1860C004	250	20,50	61,80	25,00 / 984	Coaxial High Current Probe
	1860C007	75	11,05	47,00	14,00 / 551	Coaxial High Current Probe
	F349...C	100	5,80	52,10	7,60 / 300	Coaxial High Current Probe
	F840	30	5,50	38,85	7,00 / 275	Coaxial High Current Probe

Contact blocks for high current applications

Status	Series	Current	Barrel- Ø [mm]	Total length **[mm]**	Centers [mm/mil]	Category
NEW	HC06	50	10,1	44,2	12,0 / 472	High Current Block round
NEW	HC02	100	10,1	36,4	12,0 / 472	High Current Block round
NEW	HC04	300	19,1	54,8	25,0 / 984	High Current Block round
NEW	HC01	600	75x30	20,5	35,0 / 1378	High Current Block square
NEW	HC03	600	75x30	30,0	35,0 / 1378	High Current Block square

Edition04/2019. All rights reserved. Further versions can be found at **www.feinmetall.com**

MODULAR HIGH CURRENT PROBES

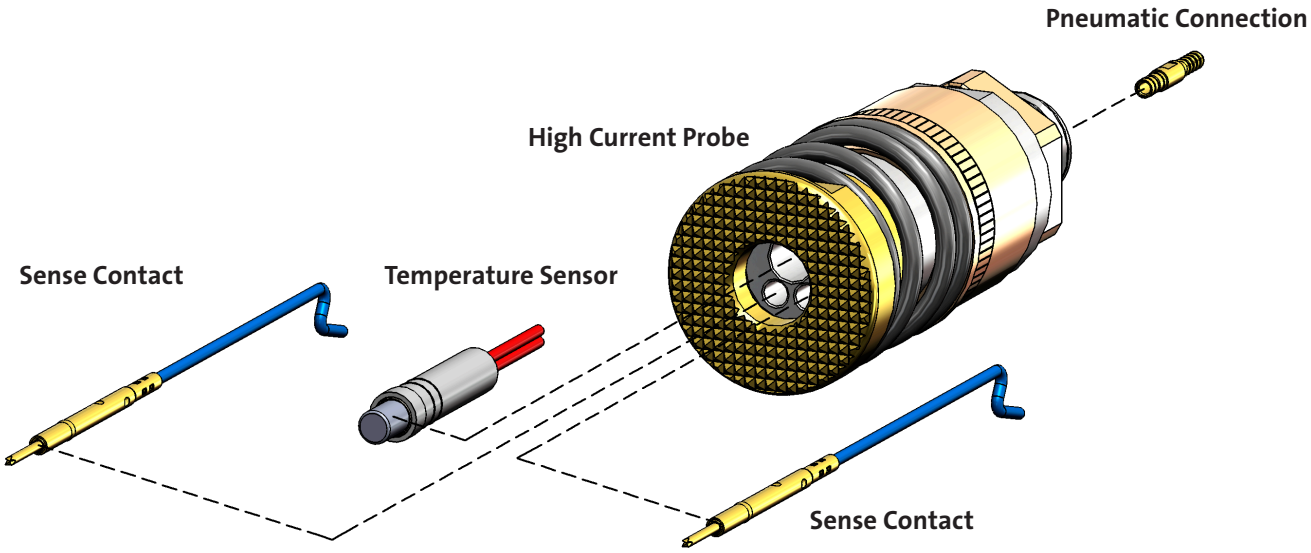

The new high-current probes can be designed individually according to the application and test setup, e.g:

- Basic assembly high current probe
- Basic module high current probe + pneumatic connection
- Coaxial probe + sense contact
- Coaxial probe + sense contact + pneumatic connection
- Coaxial probe + sense contact + temperature sensor
- Coaxial probe + sense contact + temperature sensor + pneumatic connection
- Coaxial probe + sense contact + temperature sensor + second sense contact (pneumatic connection not required)

If a temperature sensor is required, the PT100, PT1000, TypeK and the NTC sensor are usually available for selection.
The third hole can be used either for a second sense contact or for active cooling with compressed air. See figure below.

Examples:

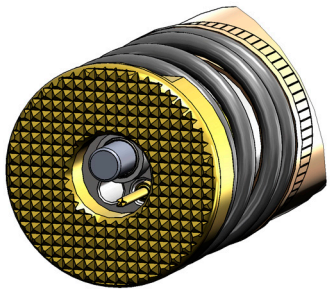

High current probe front side
+ Sense contact
+ Temperature Sensor
+ Cooling channel

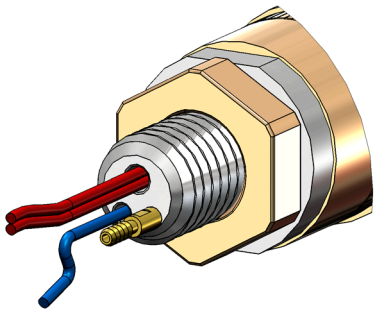

High current probe back side
+ Sense contact
+ Temperature Sensor
+ Pneumatic connection

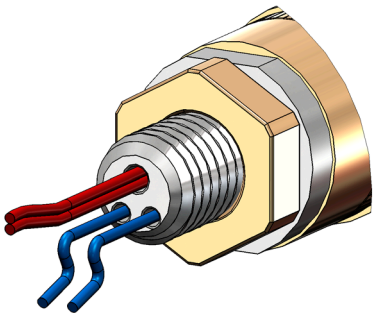

High current probe back side
+ Sense contact
+ Temperature Sensor
+ Second sense contact

Edition04/2019. All rights reserved. Further versions can be found at **www.feinmetall.com**

MODULAR HIGH CURRENT PROBES

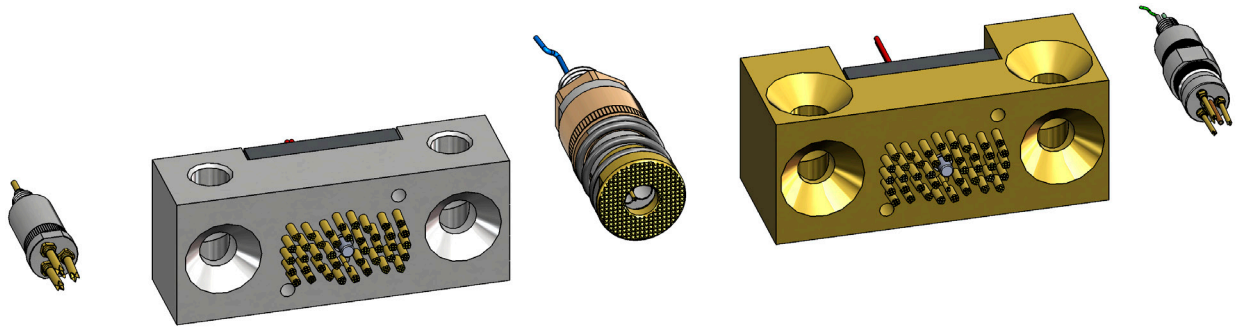

Number	Tip style power pin		Surface power ontact		
HC	01	A	06	150	G	TS1
Series		Layout		Spring force [N]		Sensor type

A	HS (high current probe)
B	HS+Sense
C	HS+Temp.sensor
D	HS+Sense+Temp.sensor
E	HS+Sense+Sense
F	HS+Sense+Sense+Temp.sensor

G	Gold plated
L	Longtime gold
N	Nickel
U	Unplated
P	Progressive
R	Rhodium
S	Silver
LX	Anodizing
M	Multiplex gold

TS1	TS0116E300U200 PT100
TS2	TS0216E300U200, PT1000
TS3	TS316E300U200, NTC 5k
TS3	TS316E300U200, NTC 10k
TS4	TS416E300U200, Type K
TS4	TS416Z110U130, Type K

Edition04/2019. All rights reserved. Further versions can be found at **www.feinmetall.com**

TS01-001

TS0116E300U200PT100 Spring-loaded temperature sensor

Centers (mm/mil)	5,00 / 197
Sensor Type	PT100
Temperature	-40 °C ... + 200 °C

Spring Force (cN ±20%)

Version	Preload	Nominal
Standard	70	200

Travel (mm)

Version	Nominal	Maximum
Standard	3,0	4,0

Materials and Plating

Sensor head	Stainless steel, unplated
Barrel	Syntetic, unplated
Spring	Stainless steel, unplated

Specifications

Measuring principle	resistance
Accuracy / grade	B
Response time t63 related to medium water	ca. 2 sec.
Response time t63 related to metal contact in air	ca. 30 sec.
Switching type	2-wire
Receptacle potential-free / galvanically isolated	yes
Cable diameter	ca. 2,0 mm
Cable length	1,0 m (extendable)
Cable insulation	Teflon
Cable end	stripped
Protection class	watertight IP67
Drill size [mm]	4,2 H7

TS01-001

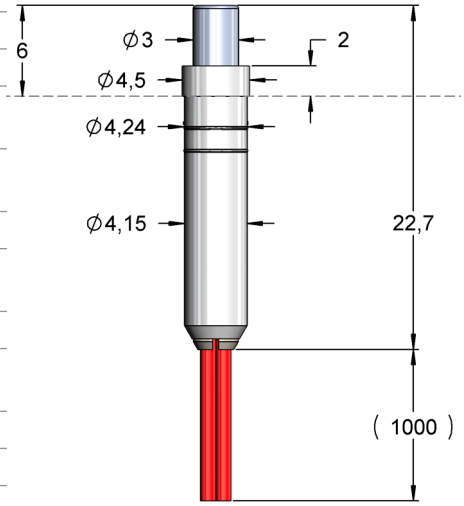

Platinum measuring resistors are designated according to their material and their nominal resistance R_0 at a temperature of 0 °C (PT100 = R_0 = 100 Ω). The PT100 is a fast-response, waterproof miniature temperature sensor suitable for universal temperature measurement even in small of spaces.

TS02-001

TS0216E300U200PT1000 Spring-loaded temperature sensor

Centers (mm/mil)	5,00 / 197
Sensor Type	PT1000
Temperature	-40 °C ... + 200 °C

Spring Force (cN ±20%)

Version	Preload	Nominal
Standard	70	200

Travel (mm)

Version	Nominal	Maximum
Standard	3,0	4,0

Materials and Plating

Sensor head	Stainless steel, unplated
Barrel	Syntetic, unplated
Spring	Stainless steel, unplated

Specifications

Measuring principle	resistance
Accuracy / grade	A
Response time t63 related to medium water	ca. 2 sec.
Response time t63 related to metal contact in air	ca. 30 sec.
Switching type	2-wire
Receptacle potential-free / galvanically isolated	yes
Cable diameter	ca. 2,0 mm
Cable length	1,0 m (extendable)
Cable insulation	Teflon
Cable end	stripped
Protection class	watertight IP67
Drill size [mm]	4,2 H7

TS02-001

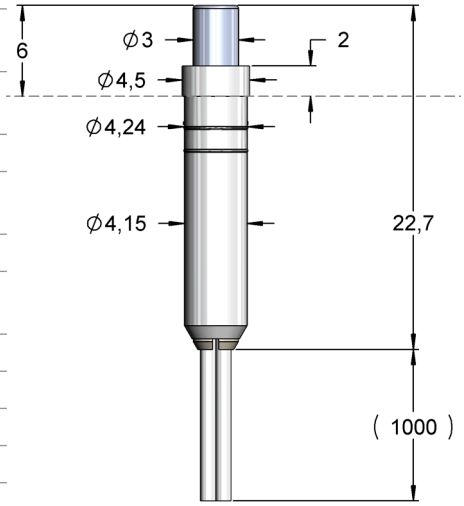

Platinum measuring resistors are designated according to their material and their nominal resistance R_0 at a temperature of 0 °C (PT1000 = R_0 = 1000 Ω). The PT1000 is a fast-response, waterproof miniature temperature sensor and suitable for universal temperature measurement even in small of spaces.

Edition04/2019. All rights reserved. Further versions can be found at **www.feinmetall.com**

TS03-001

TS0316E300U200NTC5k Spring-loaded temperature sensor

Centers (mm/mil)	5,00 / 197
Sensor Type	NTC (5kOhm)
Temperature	-40 °C ... + 200 °C

Spring Force (cN ±20%)

Version	Preload	Nominal
Standard	70	200

Travel (mm)

Version	Nominal	Maximum
Standard	3,0	4,0

Materials and Plating

Sensor head	Stainless steel, unplated
Barrel	Syntetic, unplated
Spring	Stainless steel, unplated

Specifications

Measuring principle	thermistor
Accuracy / grade	B
Response time t63 related to medium water	ca. 2 sec.
Response time t63 related to metal contact in air	ca. 30 sec.
Switching type	2-wire
Receptacle potential-free / galvanically isolated	yes
Cable diameter	ca. 2,0 mm
Cable length	1,0 m (extendable)
Cable insulation	Teflon
Cable end	stripped
Protection class	watertight IP67
Drill size [mm]	4,2 H7

TS03-001

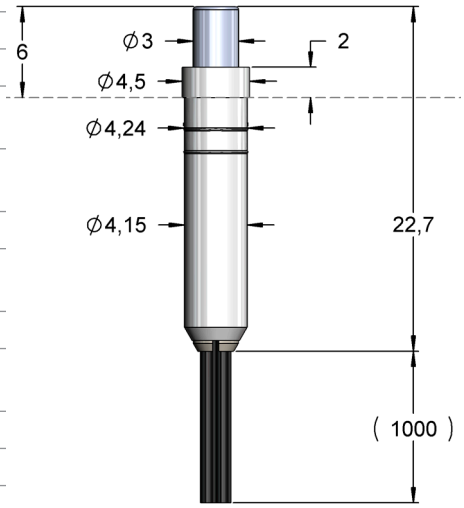

The NTC sensor (NTC = Negative Temperature Coefficient) is a temperature-dependent component. If the temperature rises, the resistance of the NTC sensor decreases. Its characteristic curve is non-linear.

TS04-001

TS0416E300U200TYPK Spring-loaded temperature sensor

Centers (mm/mil)	5,00 / 197
Sensor Type	Typ K (NiCr/Ni)
Temperature	-40 °C ... + 200 °C

Spring Force (cN ±20%)

Version	Preload	Nominal
Standard	70	200

Travel (mm)

Version	Nominal	Maximum
Standard	3,0	4,0

Materials and Plating

Sensor head	Stainless steel, unplated
Barrel	Syntetic, unplated
Spring	Stainless steel, unplated

Specifications

Measuring principle	thermocouple
Accuracy / grade	2
Response time t63 related to medium water	ca. 2 sec.
Response time t63 related to metal contact in air	ca. 30 sec.
Switching type	2-wire
Receptacle potential-free / galvanically isolated	yes
Cable diameter	ca. 1,0 mm
Cable length	1,2 m (not extendable)
Cable insulation	Teflon
Cable end	unassembled
Protection class	watertight IP67
Drill size [mm]	4,2 H7

TS04-001

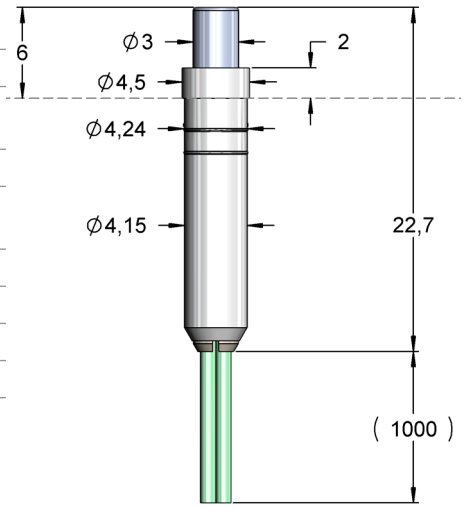

Thermocouple type K is the most common thermocouple type with a large measuring range.
Thermocouple connector not included in scope of delivery.

Edition04/2019. All rights reserved. Further versions can be found at **www.feinmetall.com**

TS04-003

Spring-loaded temperature sensor

Centers (mm/mil)	16,0 / 406
Sensor Type	Typ K (NiCr/Ni)
Temperature range	-20°C...+80°C

Spring Force (cN ±20%)

	Preload	Nominal
Sensor	-	200

Travel (mm)

Version	Nominal	Maximum
Sensor	3,0	6,0

Materials and Plating

Sensor head	Aluminum, anodised
Spring	Stainless steel, unplated
Sensor plate	Brass, unplated

Specifications

Measuring principle	thermocouple
Accuracy / grade	2
Response time t63 related to medium water	ca. 2 sec.
Response time t63 related to metal contact in air	ca. 30 sec.
Switching type	2-wire
Receptacle potential-free / galvanically isolated	yes
Cable diameter	ca. 1,0 mm
Cable length	1,8 m (not extendable)
Cable insulation	Teflon
Cable end	Thermo-plug yellow

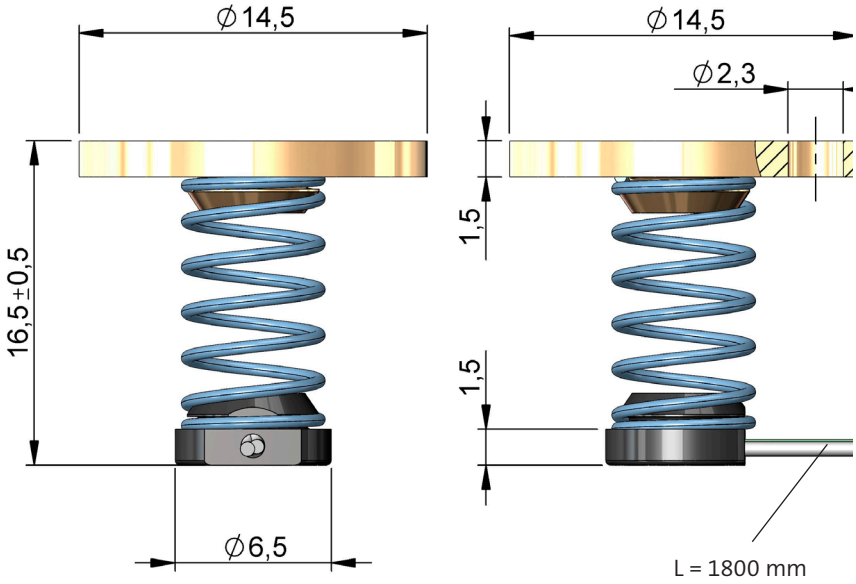

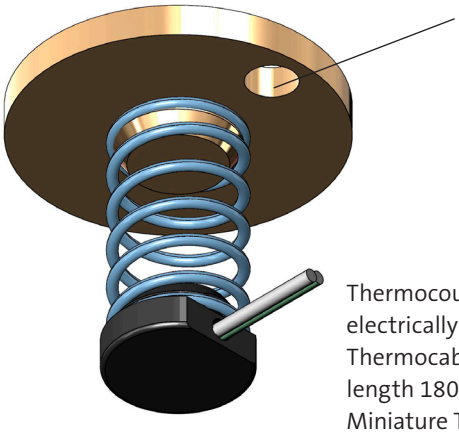

Thermocouple type K (NiCr/Ni), electrically insulated to the sensor head
Thermocable teflon insulated, length 1800mm
Miniature TE plug type K at free end

Edition04/2019. All rights reserved. Further versions can be found at **www.feinmetall.com**

FTS

Coaxial, spring-loaded temperature sensor, for voltage measurement

Centers (mm/mil)	8,50 / 335
Current	5,0 A
R typ (power)	<6 mOhm
Temperature	-40°C...+200°C

Spring Force (cN ±20%)

	Preload	Nominal
Total	-	700
Sensor	70	200
Circular cont.	400	500

Travel (mm)

Version	Nominal	Maximum
Sensor	0,5	4,0
Circular cont.	4,0	5,0

Materials and Plating

Sensor	Stainless steel, unplated
Circular cont.	BeCu, gold plated
Barrel	Syntetic, unplated
Spring Circular cont.	Stainless steel, unplated

Drill Size (mm)

Barrel with knurl	7,00 -7,03

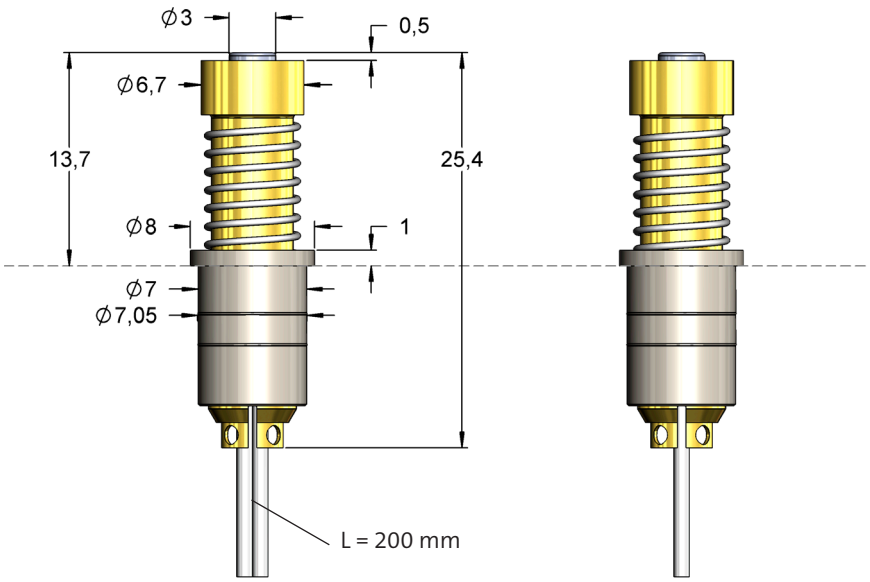

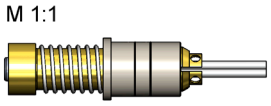

The contact probe enables the simultaneous electrical contacting and temperature measurement at the contact point in compact design.

Order Code	Tip Style	Number	Material	Ø in mm	Plating	Temperature Sensor
FTS0116E0001U700		16	E	3,00	U	PT100
FTS0216E0001U700		16	E	3,00	U	PT1000
FTS0316E0001U700		16	E	3,00	U	NTC
FTS0416E0001U700		16	E	3,00	U	Typ K

Edition04/2019. All rights reserved. Further versions can be found at **www.feinmetall.com**

HC01

UTILITY MODEL

High current block up to 600 A for contacting prismatic or pouch cells

Centers (mm/mil)	35,0 / 1378
Current (Power)	600 A
Current (Sense)	15,0 A
R typ (circular/internal)	<0,5 mOhm
Temperature	-40°C...+200°C (H)

Spring Force (cN ±20%)

Version	Preload	Nominal
Sensor	70	200
Sense	50	300
Power	70	245

Travel (mm)

Version	Nominal	Maximum
Sensor	3,0	4,0
Sense	4,4	5,5
Power	4,0	5,0
Gewinde (M)		10,0

Materials and Plating

Plunger	BeCu, gold plated
Spring	Stainless steel, gold plated
Holder	Aluminum, silver plated

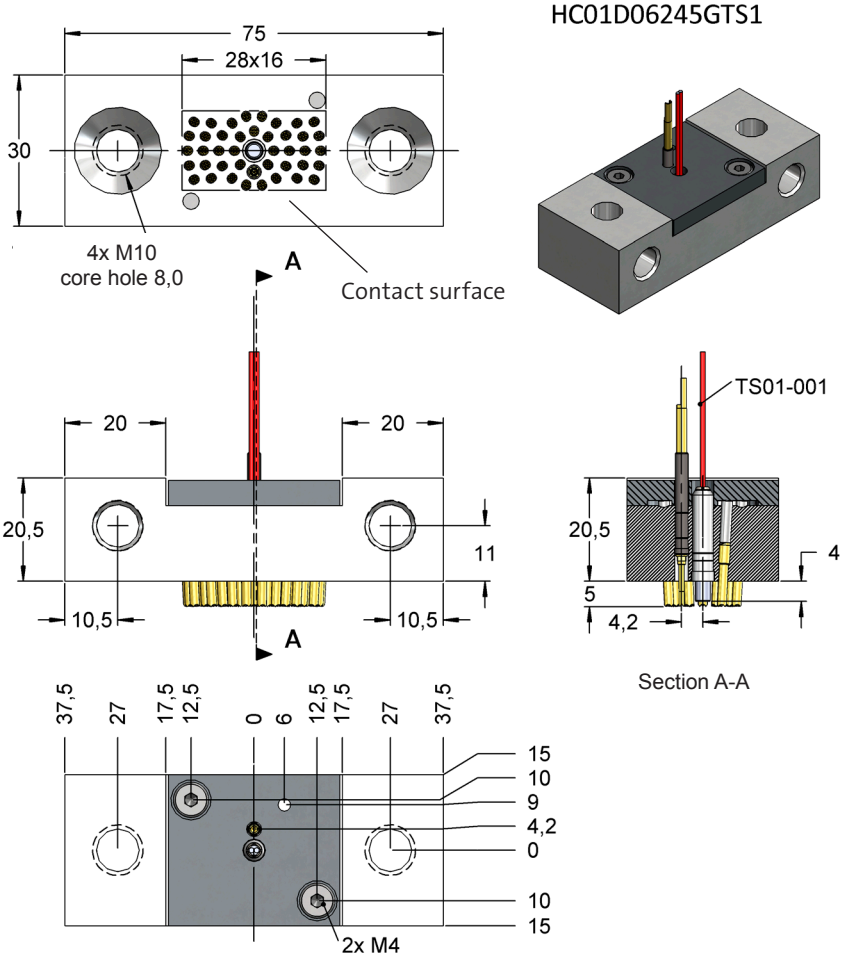

The high current block can be fixed with an M8 and lock nut or screwed directly to M10 in the thread. The additional M5 hole can always be used for cooling, regardless of the design. A pneumatic connection piece 2102959 is provided for this purpose (not included in the scope of delivery).

Suitable for:

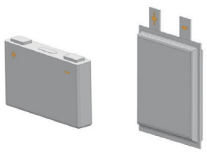

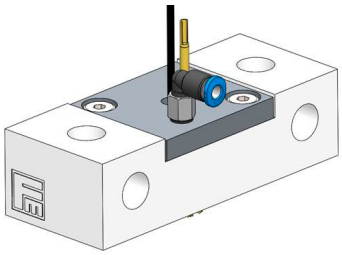

Order Code	Tip Style	Cooling	Sense	Temperature Sensor	Mounting with
HC01A06245G		x	-	-	M8 / M10
HC01B06245G		x	F732 KF07	-	M8 / M10
HC01C06245GTS1		x	-	PT100	M8 / M10
HC01C06245GTS2		x	-	PT1000	M8 / M10
HC01C06245GTS3		x	-	NTC	M8 / M10
HC01C06245GTS4		x	-	Typ-K	M8 / M10
HC01D06245GTS1		x	F732 KF07	PT100	M8 / M10
HC01D06245GTS2		x	F732 KF07	PT1000	M8 / M10
HC01D06245GTS3		x	F732 KF07	NTC	M8 / M10
HC01D06245GTS4		x	F732 KF07	Typ-K	M8 / M10

Edition04/2019. All rights reserved. Further versions can be found at www.feinmetall.com

HC01

High current block up to 600 A for contacting prismatic or pouch cells

Centers (mm/mil)	35,0 / 1378
Current (Power)	600 A
Current (Sense)	15,0 A
R typ (circular/internal)	<0,5 mOhm
Temperature	-40°C...+200°C (H)

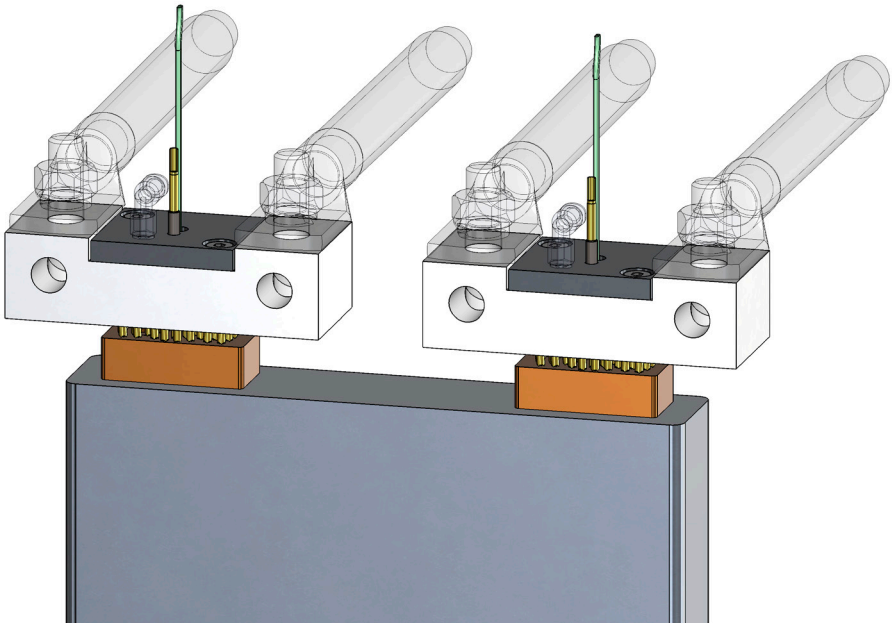

Function:
Typical application of the contact block is the contacting of prismatic or pouch cells, but also various other high current applications.

Advantages:
- Continuous current carrying capacity up to 600 A
- Individually spring-loaded plungers with proven scratch contact for current path for optimum contact on typical cell arresters of LIB cells
- Equipped with spring-loaded sense contact probe for voltage path of four-pole measurement
- Additional sense contact probe can be retrofitted via contact insert with encoder interface
- Integrated spring-loaded temperature sensor (4 types) directly at the contact point
- Low heating of less than 50K at full load
- Connection for additional cooling possibility of contact point integrated
- Universal design of electrical connections and mechanical mounting (M8/M10 vertical and horizontal)

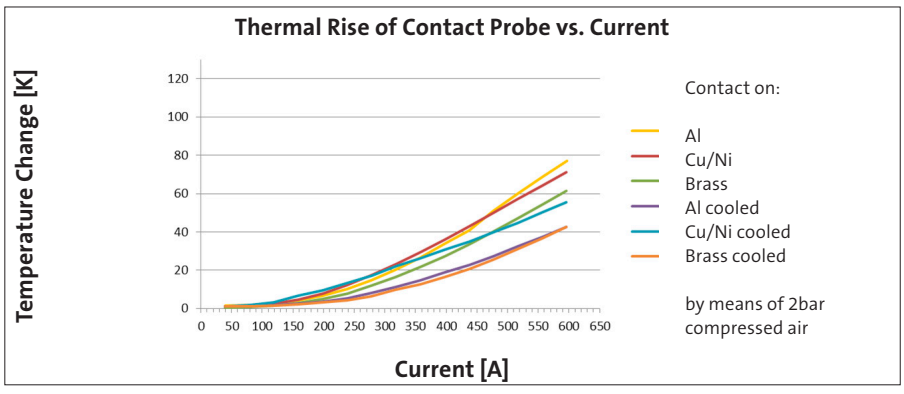

Edition04/2019. All rights reserved. Further versions can be found at **www.feinmetall.com**

VERIFICATION PROJECT AT THE ISEA INSTITUTE AT RWTH AACHEN

Target: The testing and comparison of various designs of FEINMETALL high-current blocks under application-oriented conditions in cell production, in particular during the formation process.

Test setup: Contacting of 2 blocks (PLUS and MINUS) to mating an uncoated copper contact

Diagram above: Typical temperature curve over 1h continuous current. Heating due to power loss at various measuring points on the high-current block HC01 as well as on its terminals and on the mating contact.

Diagram below: Voltage drop via contacting PLUS- and MINUS-pole.

Result:
- Same time constants of the system over all current stages.
- Constant contact resistance across the current stages.
- Constant contact resistance over time.
- No fritting effect can be seen from the measured values, which proves a stable, low-impedance contacting behaviour.
- Only 12 Watt power dissipation at 600A.

Diagram 1 - Design with SCRATCH principle

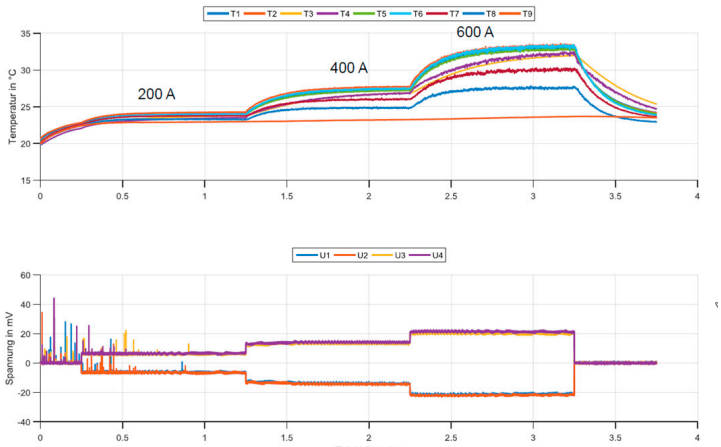

Result:
- Higher temperatures compared to scratch blocks.
- More scatter between temperature measuring points and between PLUS and MINUS contacts.
- Higher voltage drop or contact resistance.
- Pronounced fritting effect present, evident at the voltage peaks during switching.
- Approximately 4 times the power loss at 600A compared to HC01.

Diagram 2 - Design without SCRATCH principle

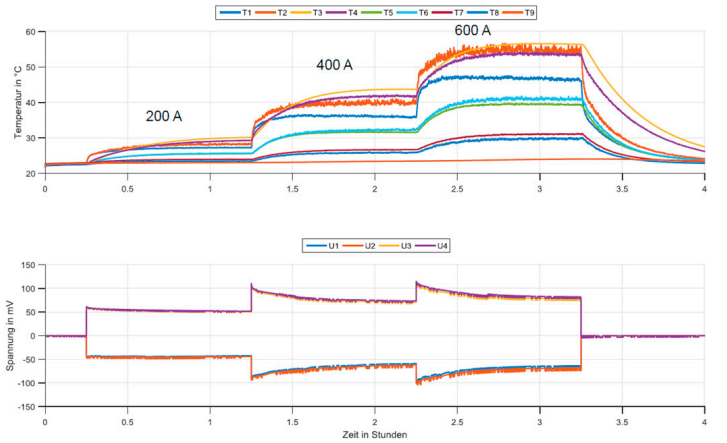

Extract from a long-term test of 2 blocks HC01 on mating contacts PLUS= Aluminum, MINUS= Nickel-plated copper.

Result:
The contact resistance at the MINUS pole is significantly higher than at the PLUS pole, mainly due to the different surfaces of the mating contact. The contact quality at the MINUS pole depends on the plunger stroke. In addition to the contact force, this is also related to the scratch effect.

Diagram 3 - Typical temperature curve over several 100 cycles.

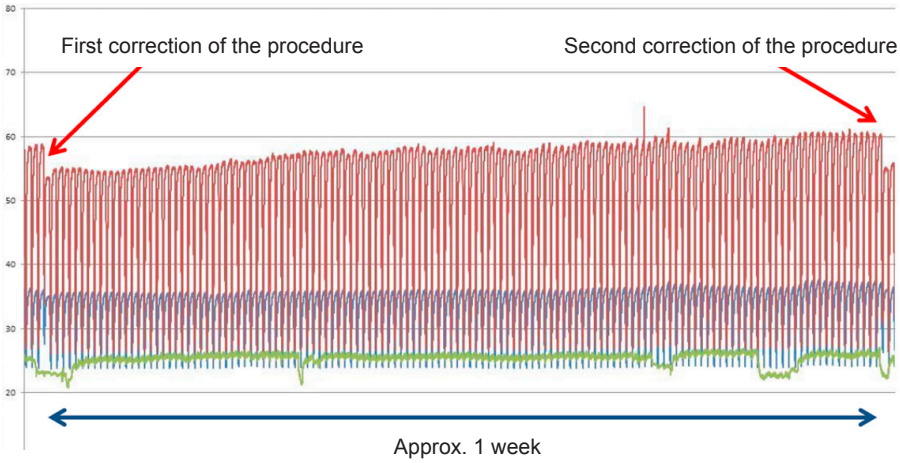

Edition04/2019. All rights reserved. Further versions can be found at www.feinmetall.com

THE PRINCIPLE OF SCRATCH CONTACTING

UTILITY MODEL

Functional principle

The scratch contact is ideally suited for reliable contacting under difficult conditions. It not only contacts axially, but also generates a lateral movement due to the axially symmetrical inclination of the contact probes. This scratch movement on the surface significantly increases the contact aggressiveness compared to standard high-current probes.

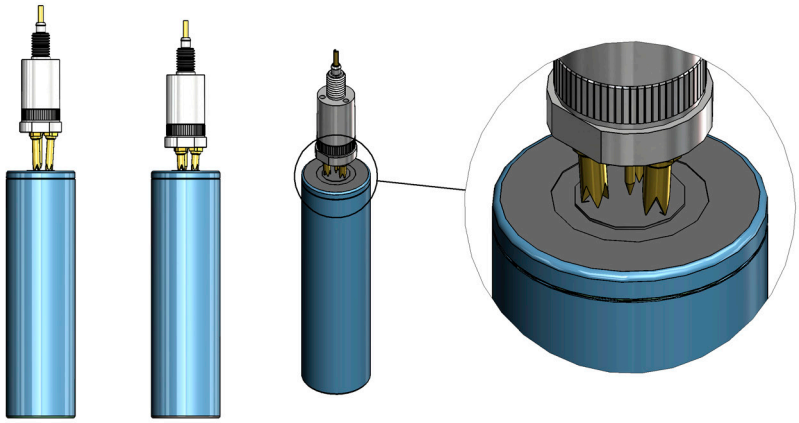

The probe tips are contacting at spring travel 0 mm in a distance d to the central axis.
During the travel the probe tips move outwards by the offset v.

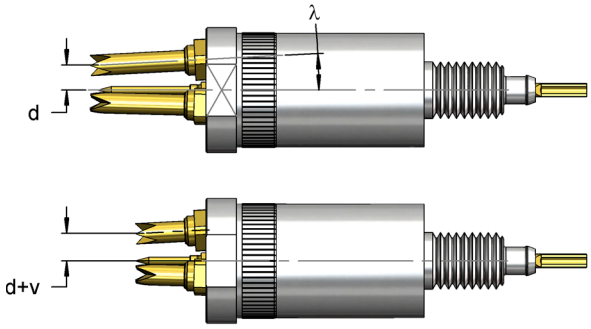

Advantages

- More effective penetration of passivation layers or contaminants.
- Deeper penetration into the surface.
- Simultaneous compensation of unevenness.
- Improved current carrying capacity
- Permanently lower contact resistance
- Significant increase in contact safety with critical surfaces such as aluminum or nickel.

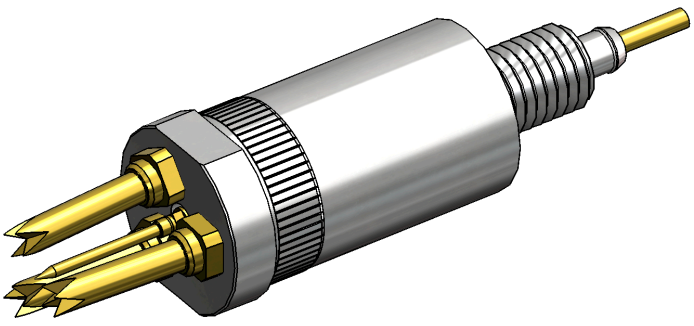

Edition04/2019. All rights reserved. Further versions can be found at **www.feinmetall.com**

HC06

UTILITY MODEL

High current block up to 50 A for Scratch contacting of contaminated surfaces

Centers (mm/mil)	12,0 / 472
Current (Power)	50 A
Current (Sense)	0,5 A
R typ	<3 mOhm
Temperature	-40°C...+200°C (H)

Spring Force (cN ±20%)

Version	Preload	Nominal
Sense pin	40	80
Circular cont.	3x 50	3x 300

Travel (mm)

Version	Nominal	Maximum
Sense pin	4,3	6,4
Circular cont.	4,0	5,0
Thread (M)		5,0
Wrench size		1,7 / 10,0

Materials and Plating

Plunger	BeCu, gold plated
Barrel	Brass, gold plated
Spring	Stainless steel, gold plated
Holder	Brass, silver plated

Accessories

Insertion tool holder	FDWZ-860C009
Insertion tool Sense pin	FDWZ-050
Screw-in tool probe circular cont.	FWZ732 (T)

Drill Size (mm)

Receptacle with knurl	10,00 - 10,05

Projection Height (mm)

HC06	12,8

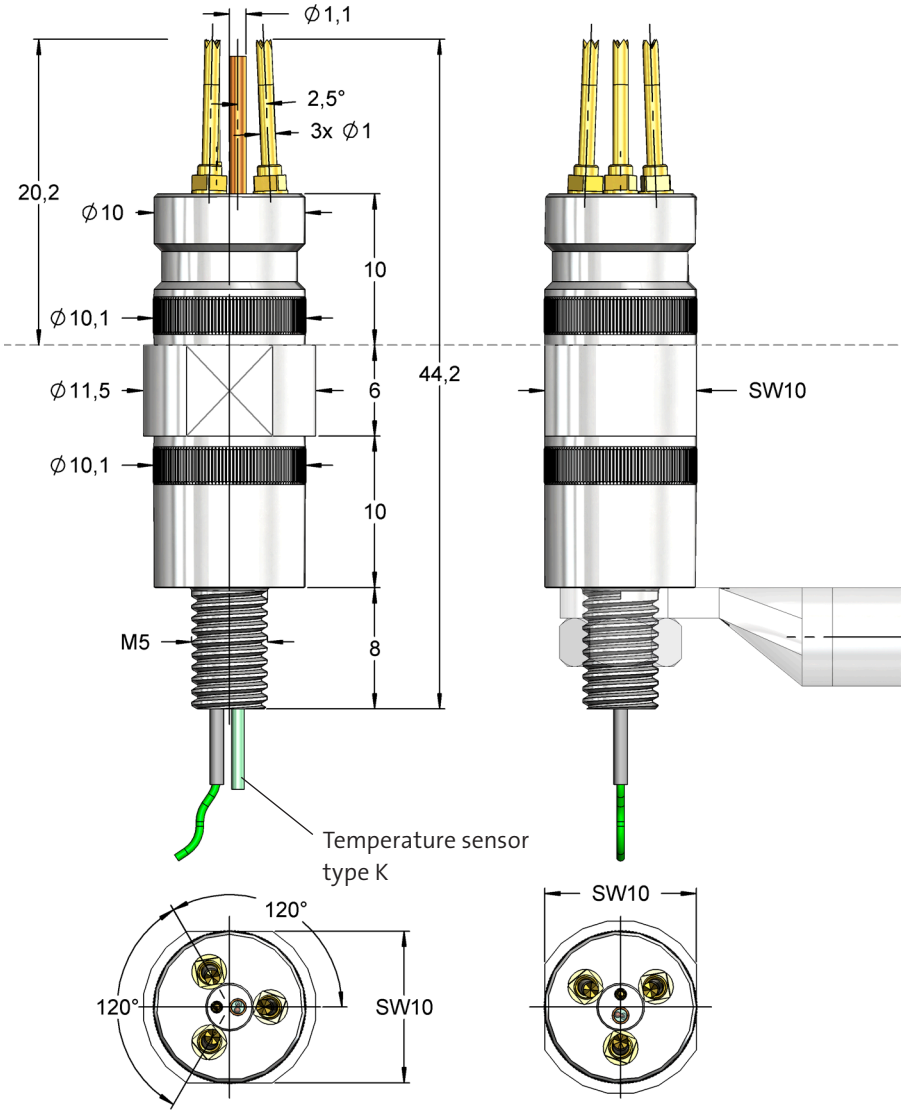

A ring eye or a cable lug can be fixed to the M5 thread by a lock nut. The built-in threaded probes F732 can be changed with the screw-in tool FWZ732T. The high-current block can also be equipped with a temperature sensor type K. The high-current block can be mounted as a pure scratch contact, with sense pin and/or with temperature sensor type K. Technical specifications for temperature sensor type K see separate data sheet.

Suitable for:

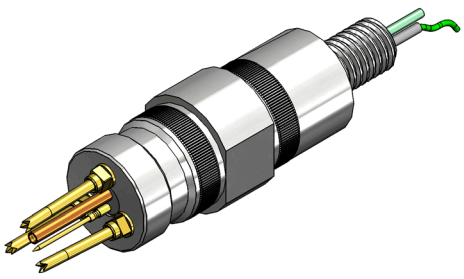

Order Code	Tip Style	Bezeichnung	Sense	Sensor	Mounting with	Screw-in Tool
HC06A29009G		3x F732 KF29	-	-	M5	FWZ732 (T)
HC06B29010G		3x F732 KF29	F040 KF18	-	M5	FWZ732 (T)
HC06D29011GTS4		3x F732 KF29	F040 KF18	Typ K	M5	FWZ732 (T)

Edition04/2019. All rights reserved. Further versions can be found at www.feinmetall.com

HC06

High current block up to 50 A for Scratch contacting of contaminated surfaces

Centers (mm/mil)	12,0 / 472
Current (Power)	50 A
Current (Sense)	0,5 A
R typ	<3 mOhm
Temperature	-40°C...+200°C (H)

Cell contact (representation without adapter)

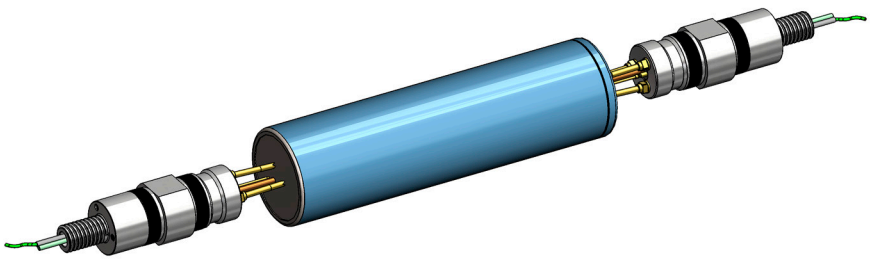

Function:

- A typical application of the coaxial probe is the contacting of cylindrical or Pouch cells in battery production and test applications, but also various other high current applications.

Advantages:

- Continuous current carrying capacity up to 50 A on cell pole < 6 mm
- Individually spring-loaded plungers with established scratch contact for current path for optimum contact on the typical cell conductors of LIB cells, also for uneven, passivated or contaminated contact surfaces
- Equipped with spring-loaded sense pin for the voltage path of the four-pole measuring and temperature sensor (TypeK)
- Low heating of less than 50K at full load
- Configurable variants from the modular system available
- Electrical connections via M5 thread
- Mounting by pressing into Ø10 mounting hole in contact direction universally possible (can also be laterally fixed)

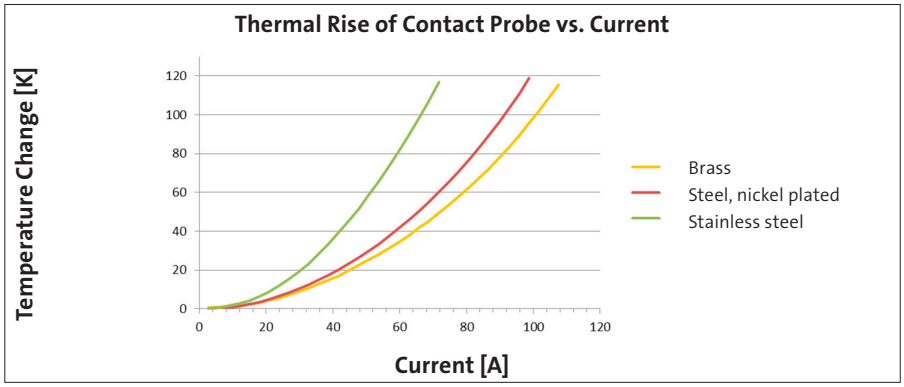

HC02

High current block up to 100 A for Scratch contacting

Centers (mm/mil)	12,0 / 472
Current (Power)	100 A
Current (Sense)	1,0 A
R typ	<2 mOhm
Temperature	-40°C...+200°C (H)

Spring Force (cN ±20%)

Version	Preload	Nominal
Sense pin	70	150
Circular cont.	3x 170	3x 600

Travel (mm)

Version	Nominal	Maximum
Sense pin	4,3	6,4
Circular cont.	4,0	5,0
Thread (M)		4,0
Wrench size		3,0/10,0

Materials and Plating

Plunger	BeCu, gold plated
Barrel	Brass, gold plated
Spring	Stainless steel, gold plated
holder	Brass, silver plated

Accessories

Insertion tool holder	FDWZ-860C009
Screw-in tool sense pin	FWZ730S1 (T)
Screw-in tool probe	FWZ733S2 (T)

Drill Size (mm)

Receptacle with knurl	10,00 - 10,05

Projection Height (mm)

HC02	12,8

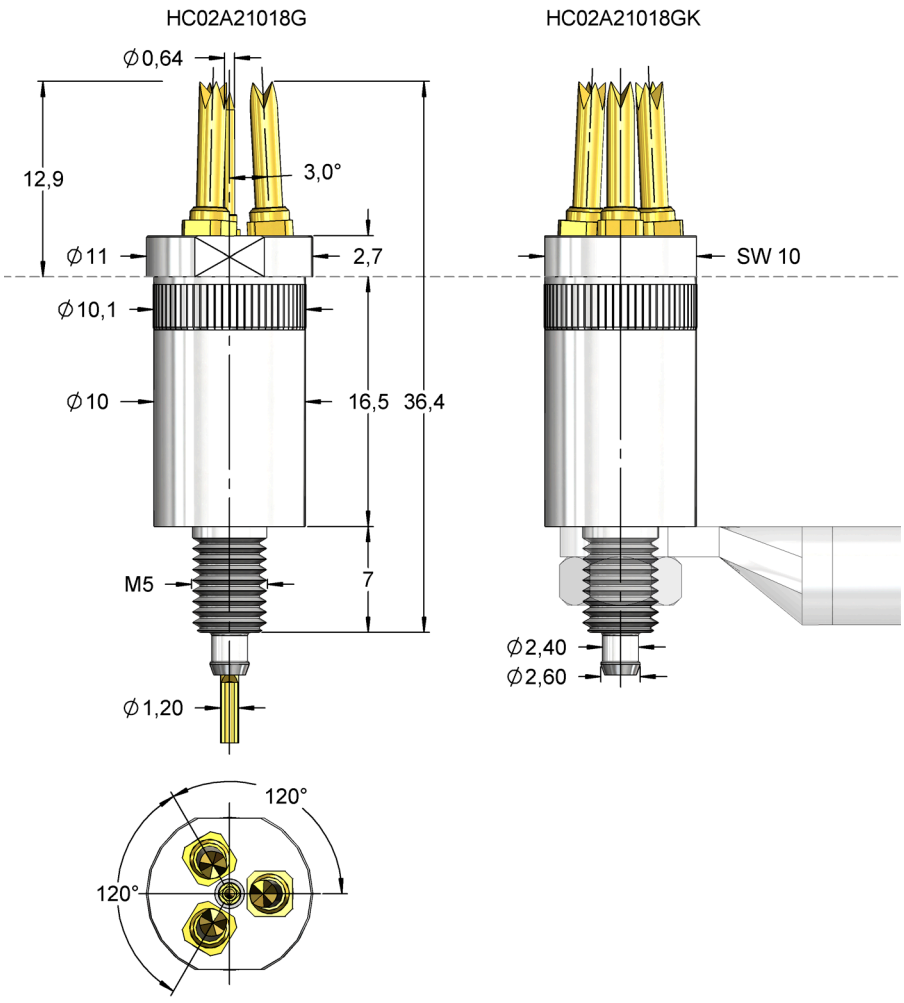

A ring eye or a cable lug can be fixed to the M5 thread by a lock nut. The built-in threaded probes F733 can be changed with the screw-in tool FWZ733S2T. The high current block is available either as a pure scratch contact or with sense pin.

Suitable for:

Order Code	Tip Style	Bezeichnung	Sense	Sensor	Mounting with	Screw-in Tool
HC02A21018G		3x F733 KF21	-	-	M5	FWZ733S2 (T)
HC02A21018GK		3x F733 KF21	x	-	M5	FWZ733S2 (T)
HC02B21020G		3x F733 KF21	-	F175 KF18	M5	FWZ733S2 (T)

Edition04/2019. All rights reserved. Further versions can be found at **www.feinmetall.com**

HC02

High current block up to 100 A for Scratch contacting

Centers (mm/mil)	12,0 / 472
Current (Power)	100 A
Current (Sense)	1,0 A
R typ	<2 mOhm
Temperature	-40°C...+200°C (H)

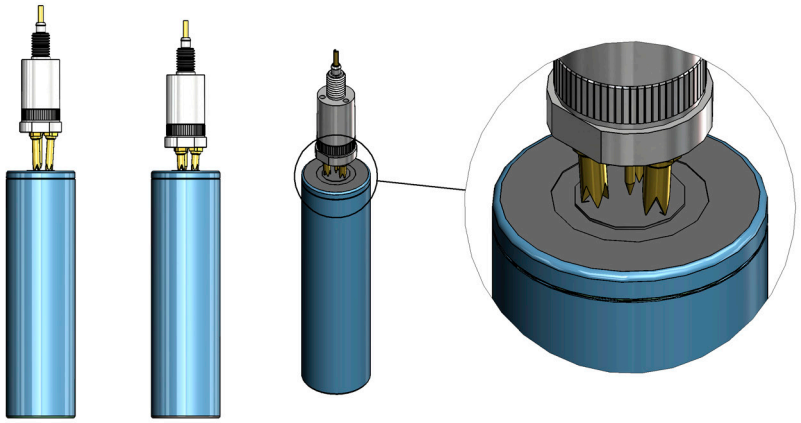

Function:
The scratch contact HC02 is well suitable for reliable contacts at difficult conditions. It contacts not only axially, but also causes a lateral scratch movement because of the inclined contact probes. This lateral scratching improves the quality of the electrical contact compared to standard high current probes.

Advantage:
The advantage of this solutions is a more effective penetration of passivation layers or contaminations and a deeper penetration of the surface, even compensating unevenness. This creates an increased Contact surface and contact force, leading to a higher ampacity of the contact. Especially the increased contact reliability of critical materials like aluminum or nickel is remarkable.

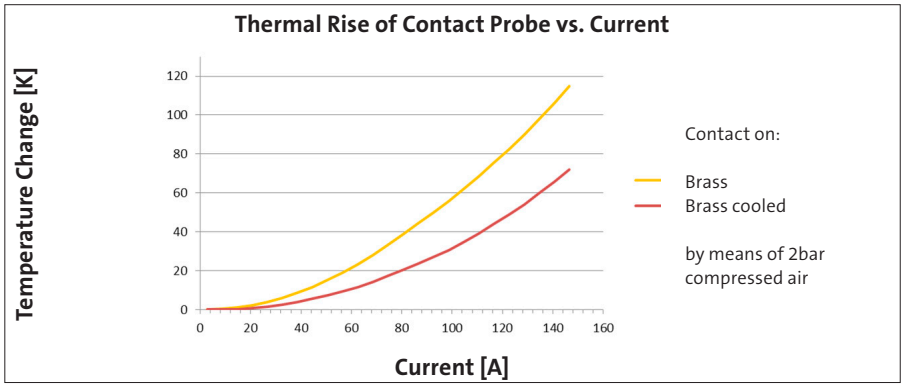

HC04

High current probe up to 300 A with coaxial design and temperature sensor

Centers (mm/mil)	25,0 / 984
Current (Circular)	300 A
Current (Internal)	2,0 A
R typ (circular/internal)	<1 mOhm
Temperature	-40°C...+200°C (H)

Spring Force (cN ±20%)

	Preload	Nominal
Sensor	60	150
Internal cont.	70	200
Circular cont.	1000	7000

Travel (mm)

Version	Nominal	Maximum
Internal cont.	4,0	5,0
Circular cont.	5,6	7,0
Thread (M)		10,0
Wrench size		17,0 / 16,0
Pointing accuracy		< 1°

Materials and Plating

Internal cont.	BeCu, gold plated
Circular cont.	BeCu, gold plated
Barrel	Brass, unplated
Spring Internal cont.	Stainless steel, unplated
Spring Circular cont.	Stainless steel, unplated

Suitable for:

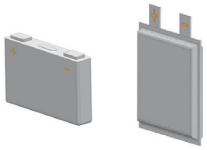

HC04B06071G

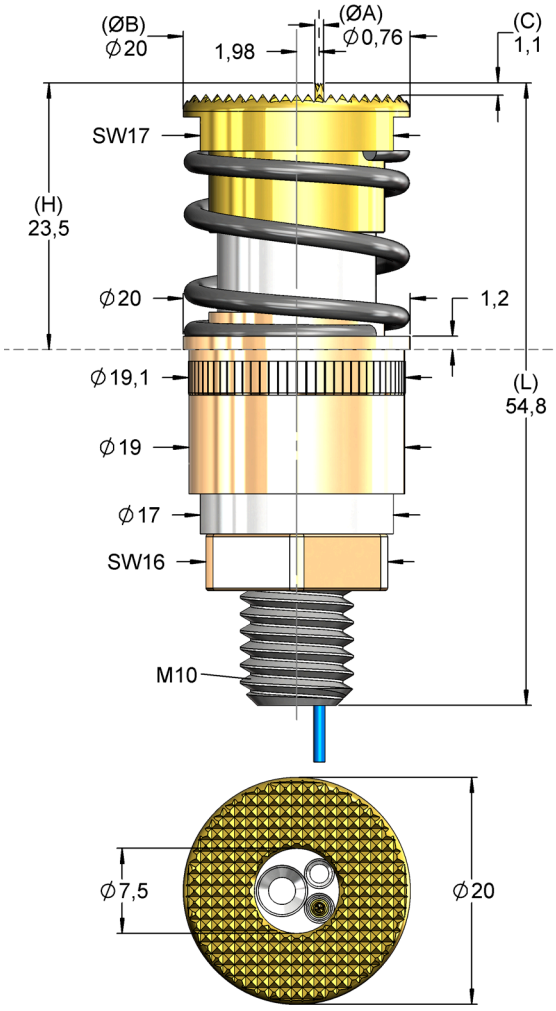

HC04D06073GTS1

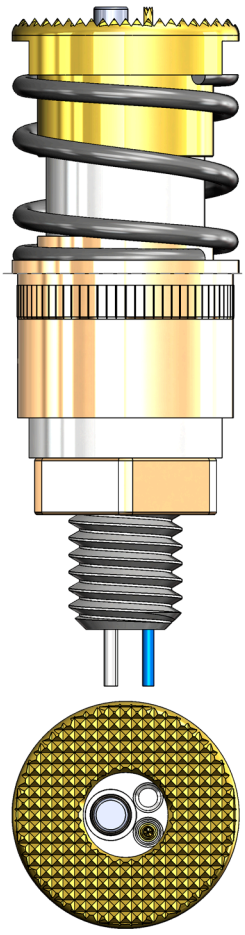

Function:
The HC04 adapts to an inclination of the Contact surface of up to 1 degree.
A ring eye or cable lug can be fixed to the M10 thread by a lock nut (max. torque 15 Ncm). Higher spring forces on request.

Order Code	Tip Style	Cooling	Sense	Sense	Temperature Sensor	Mounting with
HC04A06070G		-	-	-	-	M10
HC04B06071G		-	F562 KF21	-	-	M10
HC04B06071GK		x	F562 KF21	-	-	M10
HC04C06072GTS1		-	-	-	PT100	M10
HC04C06072GTS2		-	-	-	PT1000	M10
HC04C06072GTS3		-	-	-	NTC	M10
HC04C06072GTS4		-	-	-	Typ-K	M10
HC04D06073GTS1		-	F562 KF21	-	PT100	M10
HC04D06073GTS2		-	F562 KF21	-	PT1000	M10
HC04D06073GTS3		-	F562 KF21	-	NTC	M10
HC04D06073GTS4		-	F562 KF21	-	Typ-K	M10
HC04E06073G		-	F562 KF21	F562 KF21	-	M10

Edition04/2019. All rights reserved. Further versions can be found at www.feinmetall.com

HC04

High current probe up to 300 A with coaxial design and temperature sensor

Centers (mm/mil)	25,0 / 984
Current (Circular)	300 A
Current (Internal)	2,0 A
R typ (circular/internal)	<1 mOhm
Temperature	-40°C...+200°C (H)

Example of contacting prismatic cell:

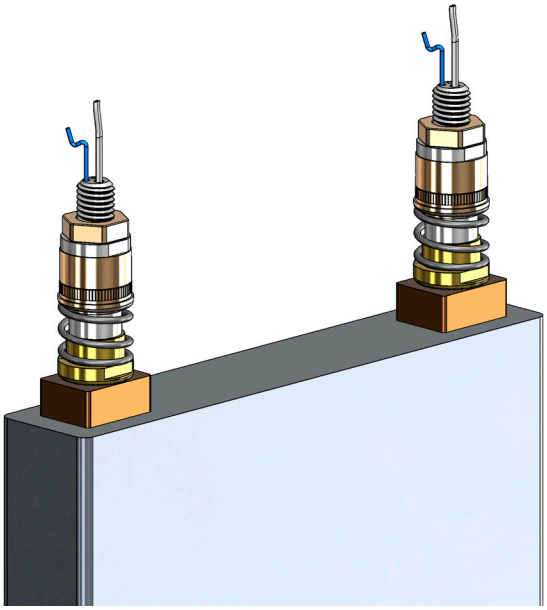

Function:
Typical application of the coaxial probes is the contacting of prismatic or pouch cells in battery production and test applications, but also various other high current applications.

Advantages:
- Continuous current carrying capacity up to 300 A in 25 mm pitch
- Aggressive and wobbly contact plunger for current path ensures optimum contact on typical LIB cell arresters
- Equipped with spring-loaded sense contact probe for the voltage path of the four-pole measurement
- Second additional sense contact probe (e.g. EIS measurement = Electrochemical-Impedance-Spectroscopy) configurable
- Integrated spring-loaded temperature sensor (4 possible types available) directly at the point of contact
- Low heating of less than 60K at full load
- Connection can be configured for additional cooling option for contacting and contact point in case of a sense
- Electrical connections via M10 thread
- Mechanical fastening via press sleeve

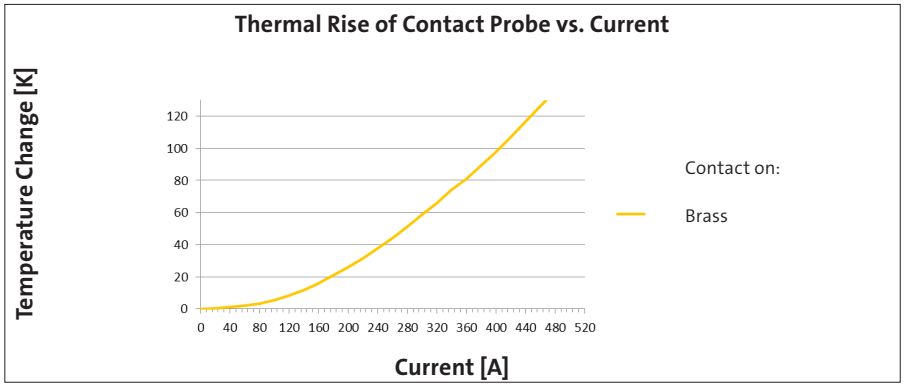

Edition04/2019. All rights reserved. Further versions can be found at www.feinmetall.com

WORLDWIDE PRESENT FOR YOU

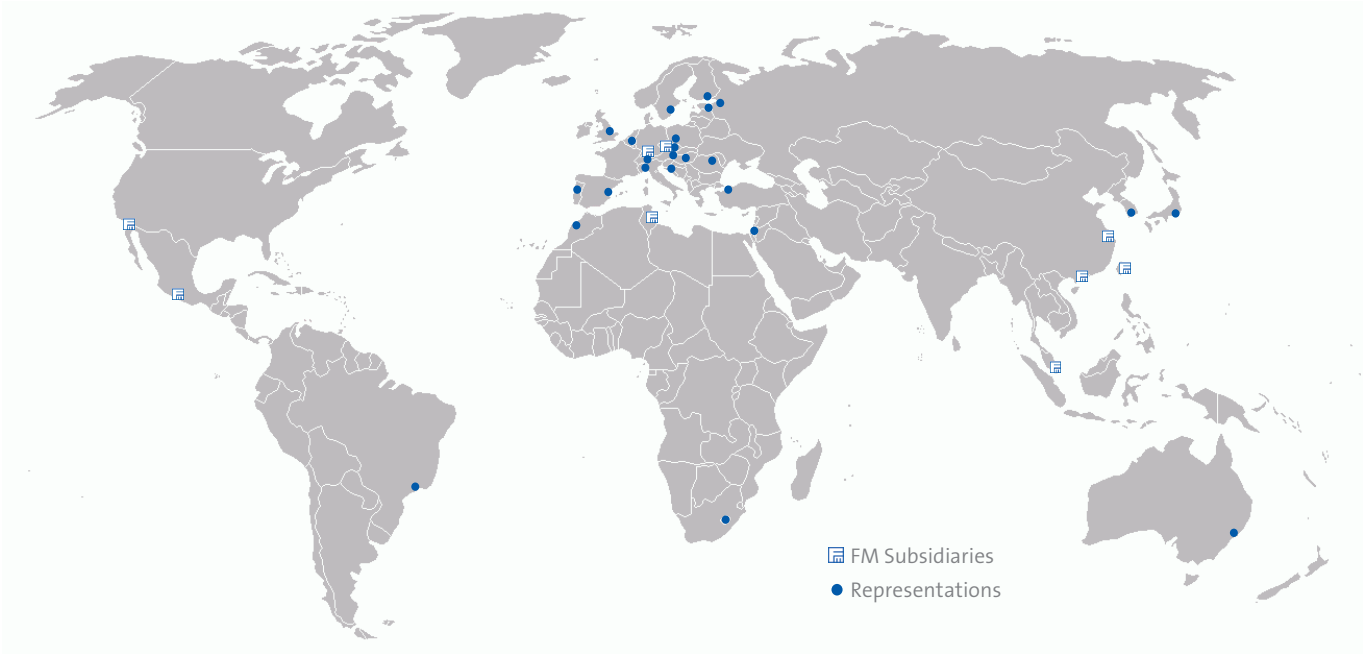

FEINMETALL GMBH | HERRENBERG, GERMANY
(+49) 7032 2001-0 | info@feinmetall.com

FEINMETALL DE MEXICO | MEXICO
(+52) 55 2591 0629 | info.mexico@feinmetall.com

FEINMETALL SHANGHAI | CHINA
(+86) 21 2898 6848 | info@cn.feinmetall.com

FEINMETALL-OCT | HSINCHU COUNTY, TAIWAN
(+886) 3 560 15 66 | info@tw.feinmetall.com

FEINMETALL CZ | CZECH REPUBLIC
(+42) 0491 470-511 | info@cz.feinmetall.com

FEINMETALL USA LLC | SAN JOSE, USA
(+1) 408 432 7500 | info.us@feinmetall.com

FEINMETALL SINGAPORE PTE LTD | SINGAPORE
(+65) 6316 4544 | info@sg.feinmetall.com

FEINMETALL TUNESIE | TUNISIA
(+216) 23 281532 | info@tn.feinmetall.com

You have test demands with specific requirements and you need a tailor-made solution?

In our catalogues you find contact probes for:

- **Board test**
- **Wire harness test**
- **Limited space**
- **High current and coaxial applications**

MARKETING062 / Version 2

FEINMETALL
Contact Technologies

www.feinmetall.com